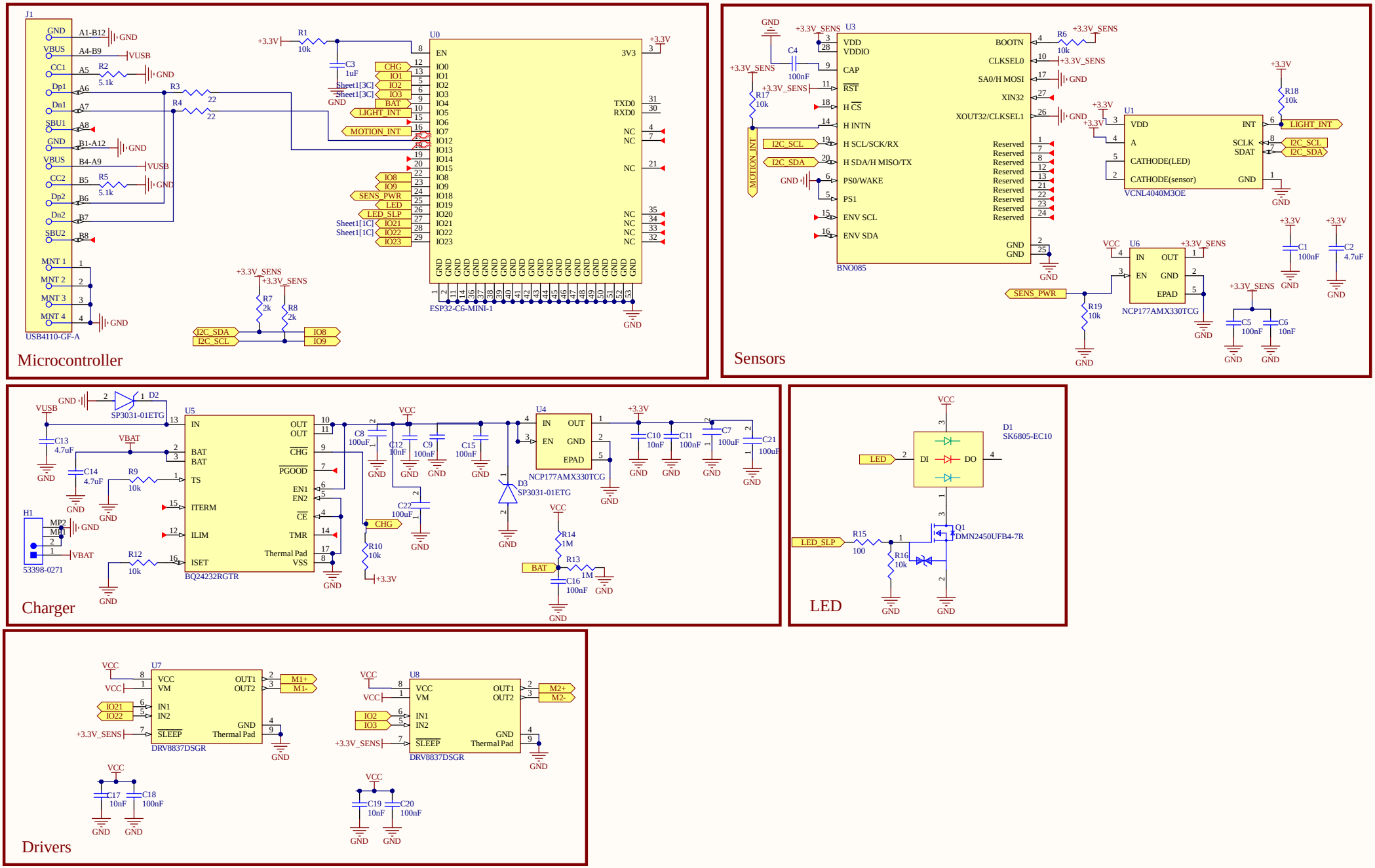


| | |
|---|---|
| Title: CodeCell C6 Drive Module | |
| Date: 27/10/2025 | Time: 10:37:00 |
| Sheet Number: 1 of 1 | Enginner: Carl Bugeja |

microbots